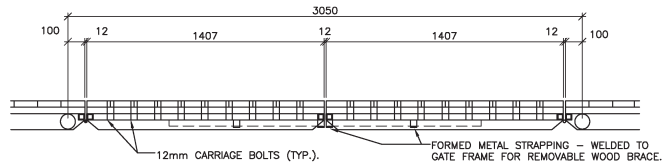

PLAN

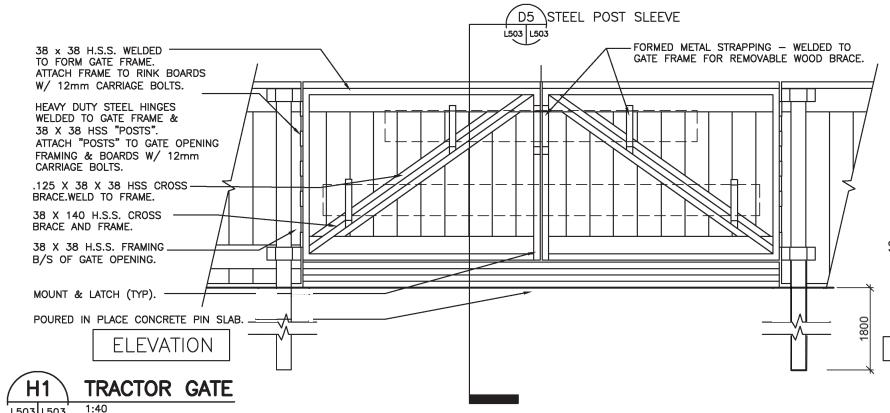

ELEVATION

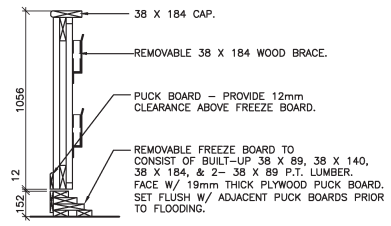

SECTION

H1 TRACTOR GATE
L503 L503 1:40

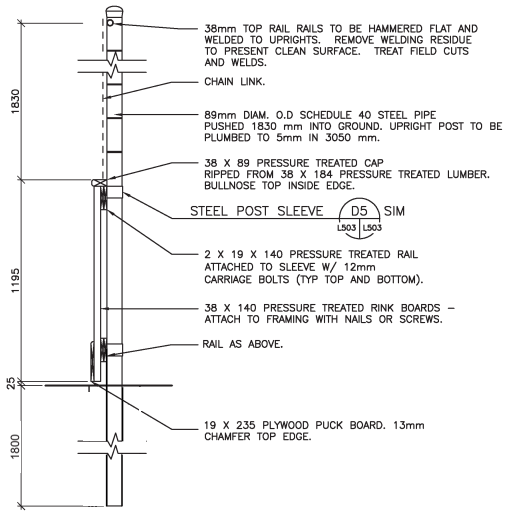

H8 HOCKEY END BOARD (TYP)
L503 L503 1:20

GENERAL NOTES:

1. FINISHES:
   - PAINT ALL WOOD.
   - PAINT COLOURED LINES ON HOCKEY BOARDS FULL HEIGHT WITH EACH SIDE AS FOLLOWS:
   - RED LINE @ CENTRE 300mm WIDE
   - BLUE LINES 300mm WIDE 21.3m FROM END BOARDS
   - RED LINES @ GOALS 50mm WIDE 3.0m FROM END BOARDS
   - ALL POSTS AND SAFETY FENCE RAILS, FITTINGS, & MESH TO BE GALVANIZED.

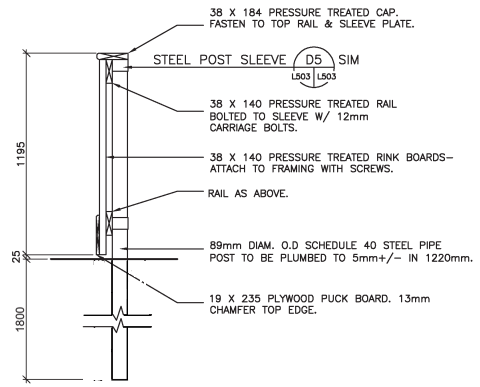

H12 RINK BOARDS (TYP)
L503 L503 1:20

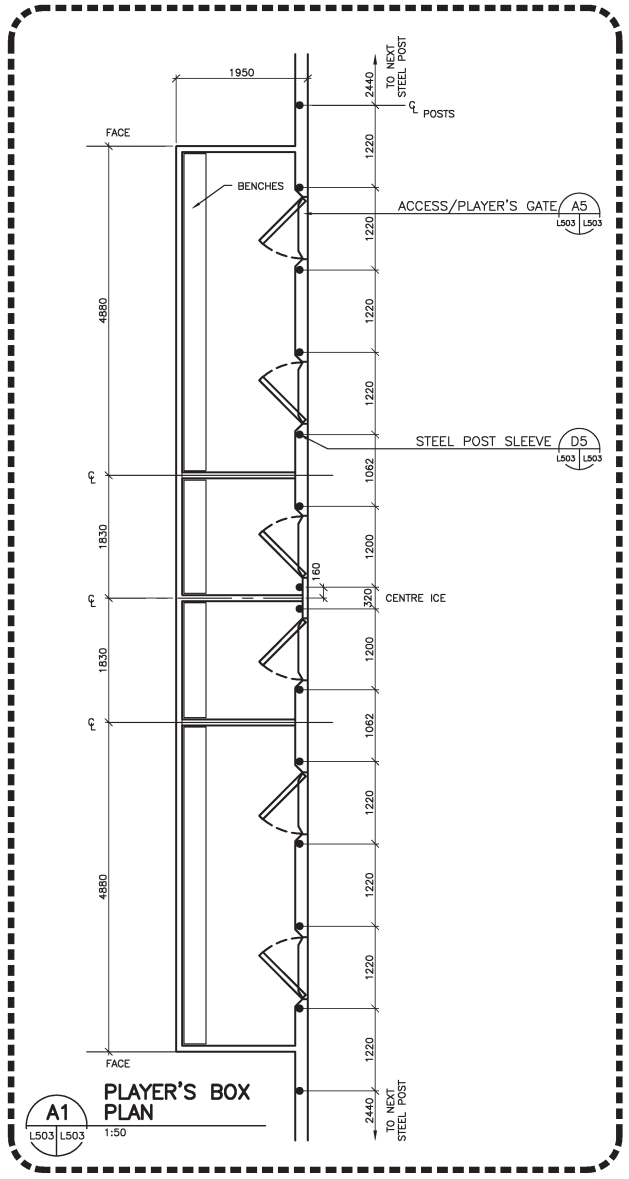

A1 PLAYER'S BOX PLAN
L503 L503 1:50

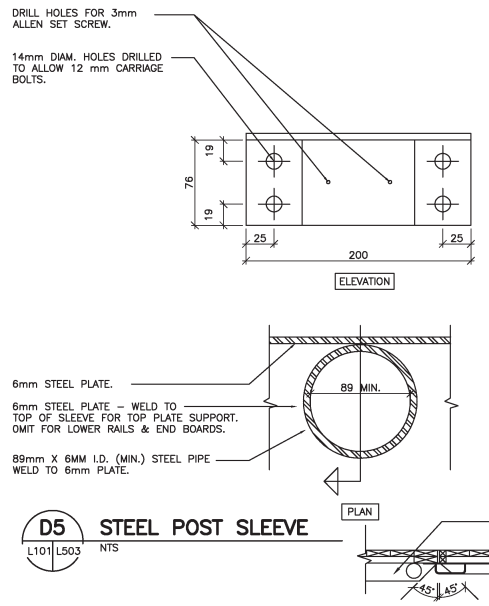

D5 STEEL POST SLEEVE
L101 L503 NTS

NOTE: UNDERLINED DIMENSIONS INDICATE ACCESS GATE DIMENSIONS.

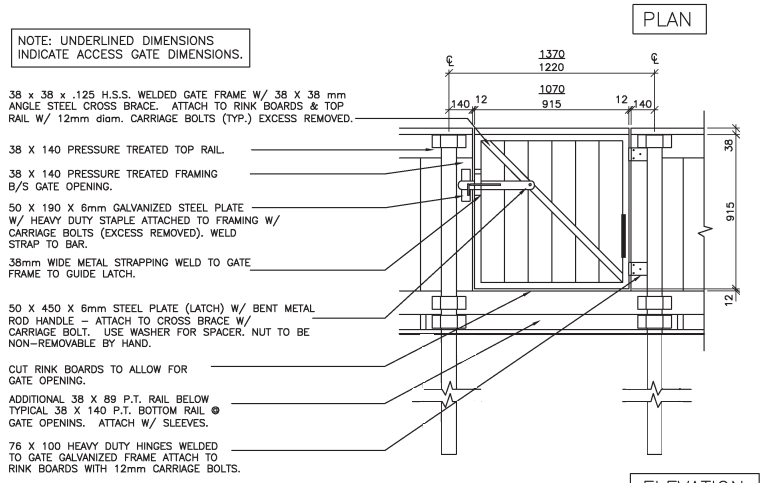

PLAN

ELEVATION

A5 ACCESS/PLAYER'S GATE
L503 L503 1:20

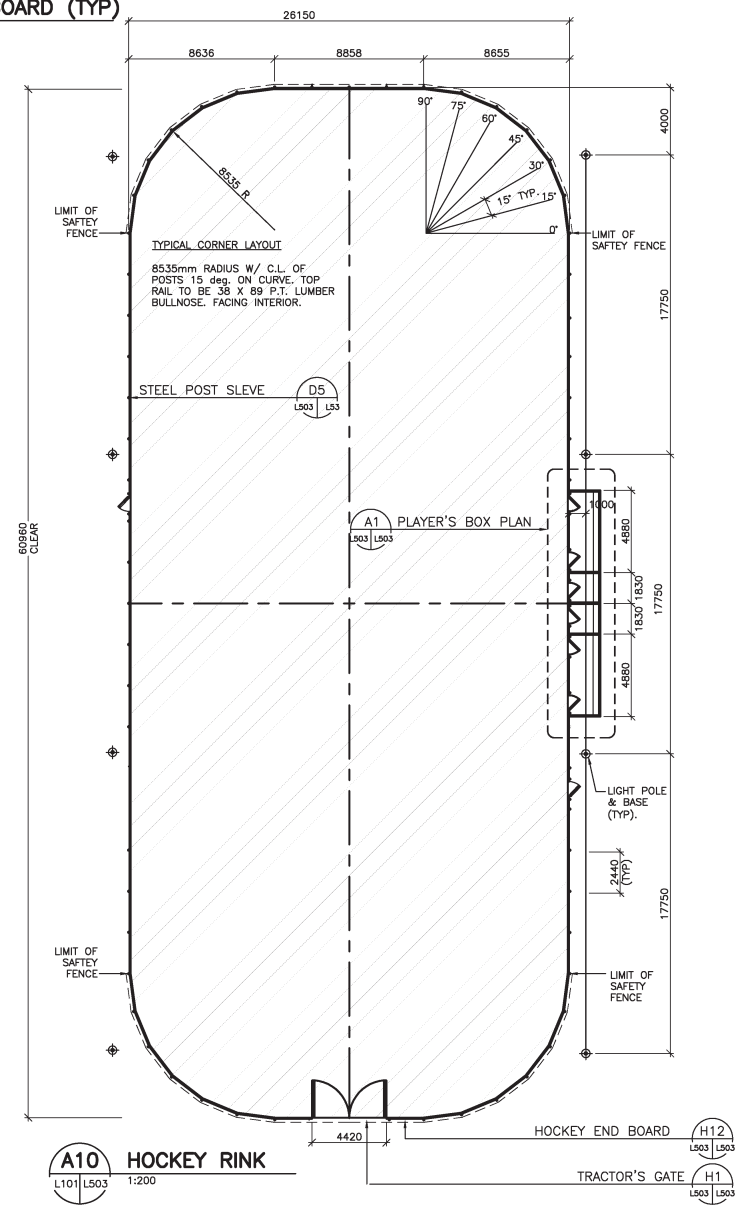

A10 HOCKEY RINK
L101 L503 1:200

WALLACE + WALLACE
90 Lowson Crescent.
Winnipeg, Manitoba, Canada R3P 2H8
Phone: 1-800-409-2342
Fax: 1-204-284-1868
Web: www.wallacefences.com

Description: HOCKEY RINK DETAILS -			
Customer / Project Name:			
Finish: -			Date:
Drawing No: SS-11-08-13-1		Rev: -	Sheet: 1 of 1